USER GUIDE

SR HI-CAPA

FULL METAL / AIRSOFT PISTOL

DUAL POWER SYSTEM

⚠WARNING

- ▲When using airsoft guns eye protection is required.(goggles or mask)
- ▲Never place your finger on the trigger until you are ready to fire the gun. Alway put the gun in safe mode when not in use. Tread every gun as if it is loaded.
- ▲Please keep away from children.
- ▲BBs may remain in the barrel after magazine removal. To avoid injury, never look directly into the barrel and ensure the gun is always pointed in safe direction.
- ▲Disassembly or modification of this product may result in damage to your Airsoft gun, loss of warranty, and/or serious injury.
- ▲Please select a safe place to fire your airsoft gun. Always know your state and local laws concerning airsoft gun use.
- ▲Do not aim or shoot at humans, animals, buildings, or vehicies.
- ▲Please use a firearm case or bag when transporting your airsoft gun.

SR HI-CAPA PARTS DESCRIPTION

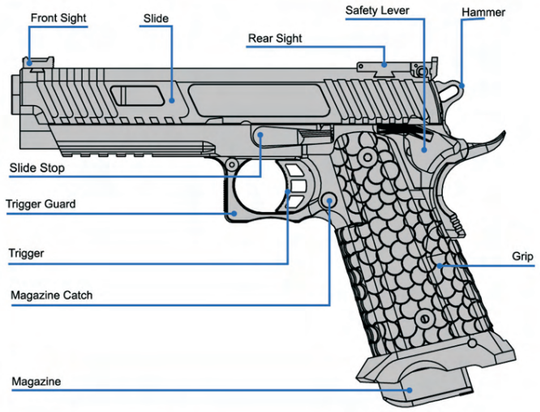

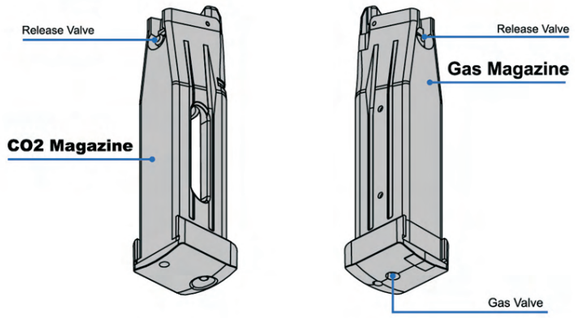

GAS INJECTION

Safety on and Remove Magazine

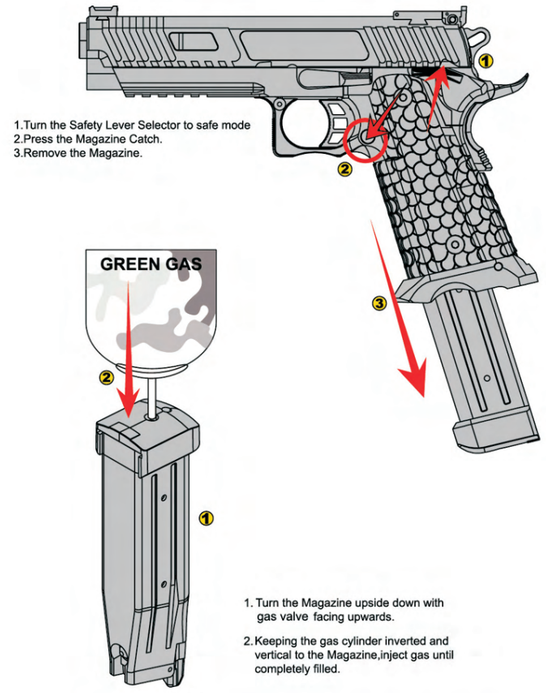

INSTALL CO2 CARTRIDGE

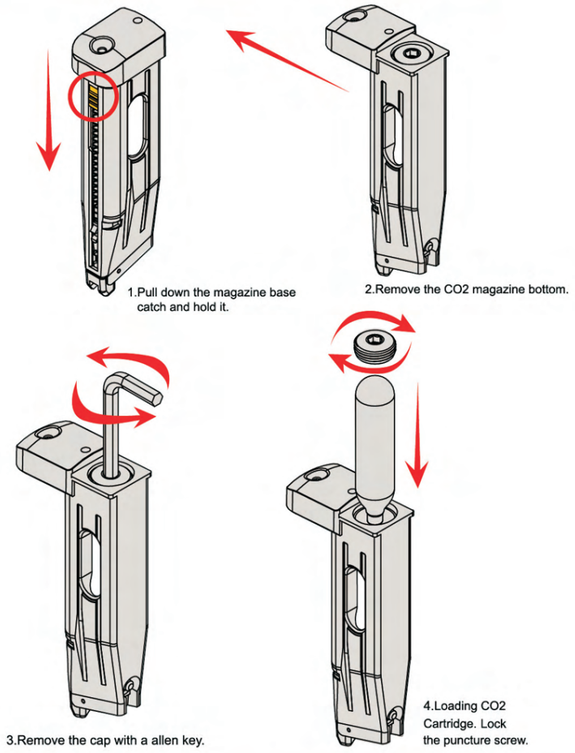

DISAEMBLE SLIDE

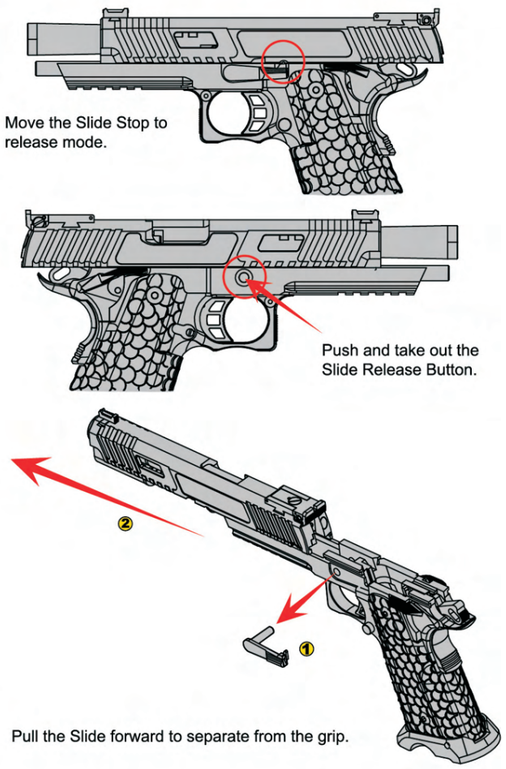

HOP-UP ADJUSTMENT

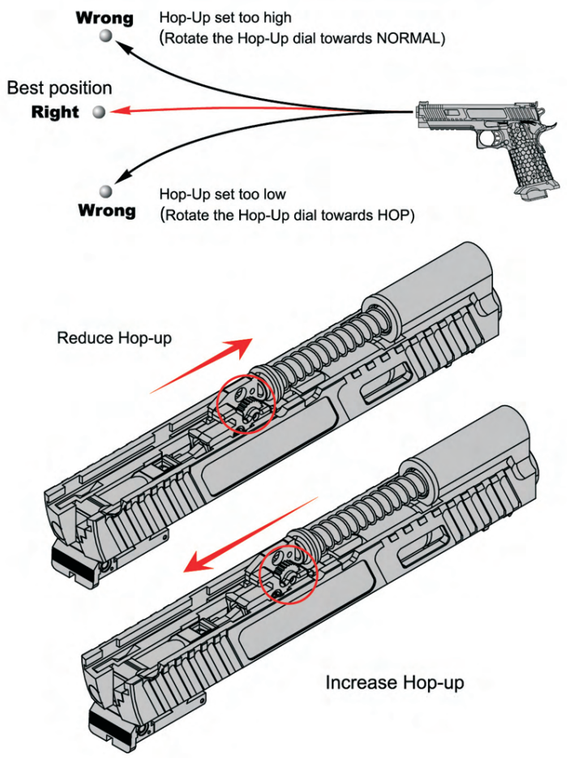

BABAYAGA SERIES SCHEMATIC (DUAL POWER SYSTEM)

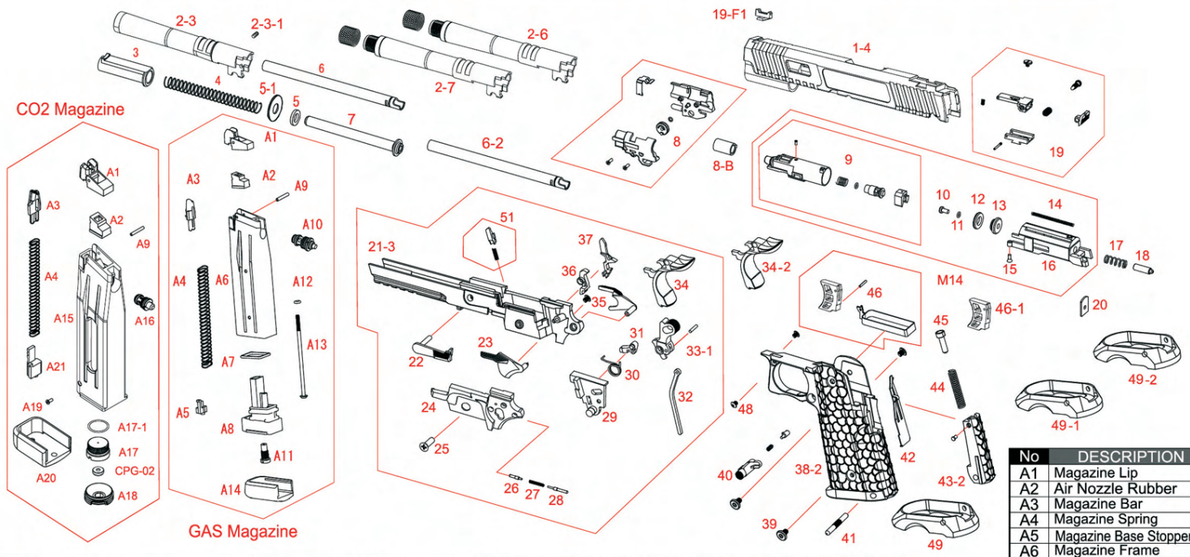

No	DESCRIPTION
1-4	Baba Yaga Slide
2-3	Baba Yaga Outer Barrel
2-6	5.1" Extension Outer Barrel (RG)
2-7	5.1" Extension Outer Barrel (SV)
2-3-1	Screw
3	Recoil Spring Plug
4	Recoil Spring(5.1 Ver.)
5	Rubber Washer
5-1	Washer
6	Inner Barrel(5.1 Ver.) 112.5mm
6-2	Inner Barrel(5.1 Ver.) 122mm
7	Recoil Spring Guide(5.1 Ver.)
8	Hop-Up Chamber
8-B	Hop Bucking
9	Air Nozzle

No	DESCRIPTION
10	Screw
11	O Ring
12	Piston
13	Piston O Ring
14	Nozzle Spring
15	Screw
16	Air Nozzle base
17	Firing pin Spring
18	Dummy Firing pin
19	Raer Sight
19-F1	Front Sight
M14	Air Nozzle Set
20	Plate
21-3	Lower Receiver (Baba Yaga ver.)
22	Slide Stop

No	DESCRIPTION
23	Safety
24	Hammer base
25	Screw
26	Pin
27	Spring
28	Pin
29	Hammer base cover
30	Sear Spring
31	Firing Pin
32	Hammer Guide
33-1	Hammer(4.3" Ver.)
34	Grip Safety(5.1" Ver.)
34-2	Grip Safety(5.1" Silver Ver.)
35	Screw
36	Shear Spring

No	DESCRIPTION
37	Shear
38-2	Baba Yaga Grip
39	Screw
40	Magazine Catch
41	Main Spring Housing Pin
42	Sear Spring
43-2	Baba Yaga Main Spring Housing
44	Main Spring
45	Main Spring Screw
46	Trigger set
46-1	Trigger (SV)
48	Screw
49	Magwell
49-1	Magwell (SV)
49-2	Magwell (RG)
51	Disconnector

No	DESCRIPTION
A1	Magazine Lip
A2	Air Nozzle Rubber
A3	Magazine Bar
A4	Magazine Spring
A5	Magazine Base Stopper
A6	Magazine Frame
A7	O Ring
A8	Magazine Base
A9	Pin
A10	Valve
A11	Gas Valve
A12	O Ring
A13	Screw
A14	Magazine Bottom
A15	CO2 Magazine Frame
A16	CO2 Magazine Valve
A17	CO2 Cartidge Stab
A17-1	O Ring
A18	CO2 Cartidge Base Cover
A19	Screw
A20	CO2 Magazine Bottom
A21	Magazine Base Catch
CPG-02	Gas Seal

SR HI-CAPA 5.1” Ver. SCHEMATIC

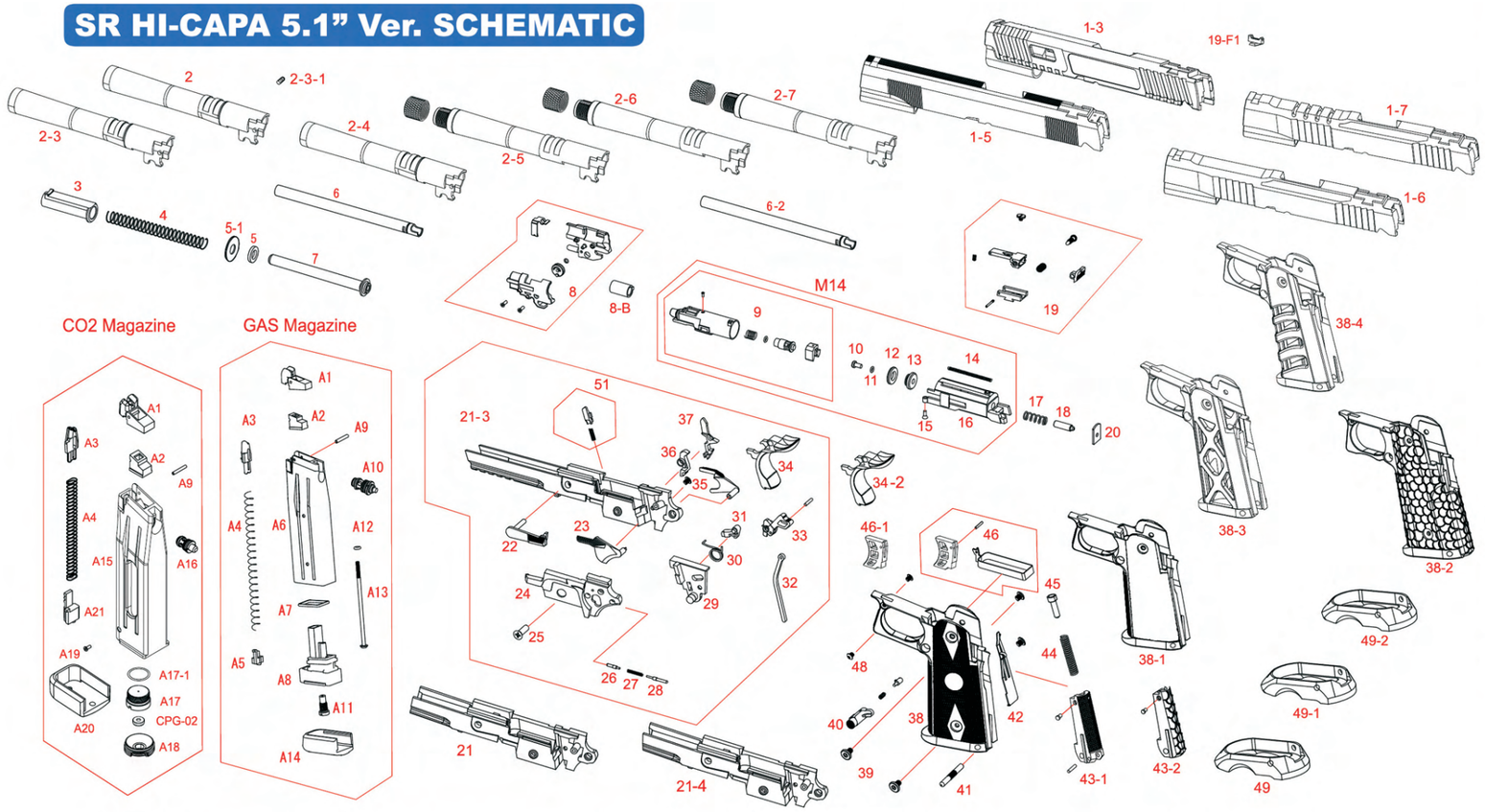

SR HI-CAPA 5.1” VER. PARTS LIST

No	DESCRIPTION
1-3	Babayaga Slide
1-5	Elite Seires Slide
1-6	Helios Series MKI MKII Slide
1-7	Helios Series MKIII MKIV Slide
2	5.1” Ver. Outer Barrel(BK)
2-2	Babayaga Outer Barrel(RG)
2-4	5.1” Ver. Outer Barrel(SV)
2-5	5.1” Ver. Extension Outer Barrel(BK)
2-6	5.1” Ver. Extension Outer Barrel(RG)
2-7	5.1” Ver. Extension Outer Barrel(SV)
2-3-1	Screw
3	Recoil Spring Plug
4	Recoil Spring(5.1Ver.)
5	Rubber Washer
5-1	Washer
6	Inner Barrel(5.1Ver.) 112.5mm
6-2	Inner Barrel(5.1Ver.) 122mm
7	Recoil Spring Guide
8	Hop-Up Chamber
8B	Hop Bucking
9	Air Nozzle
10	Screw
11	O Ring
12	Piston O Ring
13	Piston
14	Nozzle Spring
15	Screw
16	Air Nozzle base
17	Firing pin Spring
18	Dummy Firing pin
19	Raer Sight
19-F1	Front Sight
20	Plate
21	Lower Receiver (Elite ver.)
21-3	Lower Receiver (Babayaga ver.)
21-4	Lower Receiver (Helios ver.)
22	Slide Stop

No	DESCRIPTION
23	Safety
24	Hammer base
25	Screw
26	Pin
27	Spring
28	Pin
29	Hammer base cover
30	Sear Spring
31	Impact Pin
32	Hammer Guide
33	Hammer(5.1” Ver.)
33-1	Hammer(4.3” Ver.)
34	Grip Safety(5.1” Ver.) Black
34-2	Grip Safety(5.1” Ver.) Silver
35	Screw
36	Shear Spring
37	Shear
38	Athletics Grip
38-1	Grip(5.1” & 4.3 Ver.)
38-2	Baba Yaga Grip
38-3	Grid Type Grip
38-4	Rib Type Grip
39	Screw
40	Magazine Catch
41	Main Spring Housing Pin
42	Sear Spring
43-1	Main Spring Housing
43-2	Baba Yaga Main Spring Housing
44	Main Spring
45	Main Spring Screw
46	Trigger Set
46-1	Trigger(Silver)
48	Screw
49	Magwell
49-1	Magwell(SV)
49-2	Magwell(RG)
51	Disconnector
M14	Air Nozzle Set

MAGAZINE PATRS LIST

No	DESCRIPTION
A1	Magazine Lip
A2	Air Nozzle Rubber
A3	Magazine Bar
A4	Magazine Spring
A5	Magazine Base Stopper
A6	Magazine Frame
A7	O Ring
A8	Magazine Base
A9	Pin
A10	Valve
A11	Gas Valve
A12	O Ring
A13	Screw
A14	Magazine Bottom
A15	CO2 Magazine Frame
A16	CO2 Magazine Valve
A17	CO2 Cartidge Stab
A17-1	O Ring
A18	CO2 Cartidge Base Cover
A19	Screw
A20	CO2 Magazine Bottom
A21	Magazine Base Catch
CPG-02	Gas Seal

SR HI-CAPA TARTARUS 4.3” Ver. SCHEMATIC

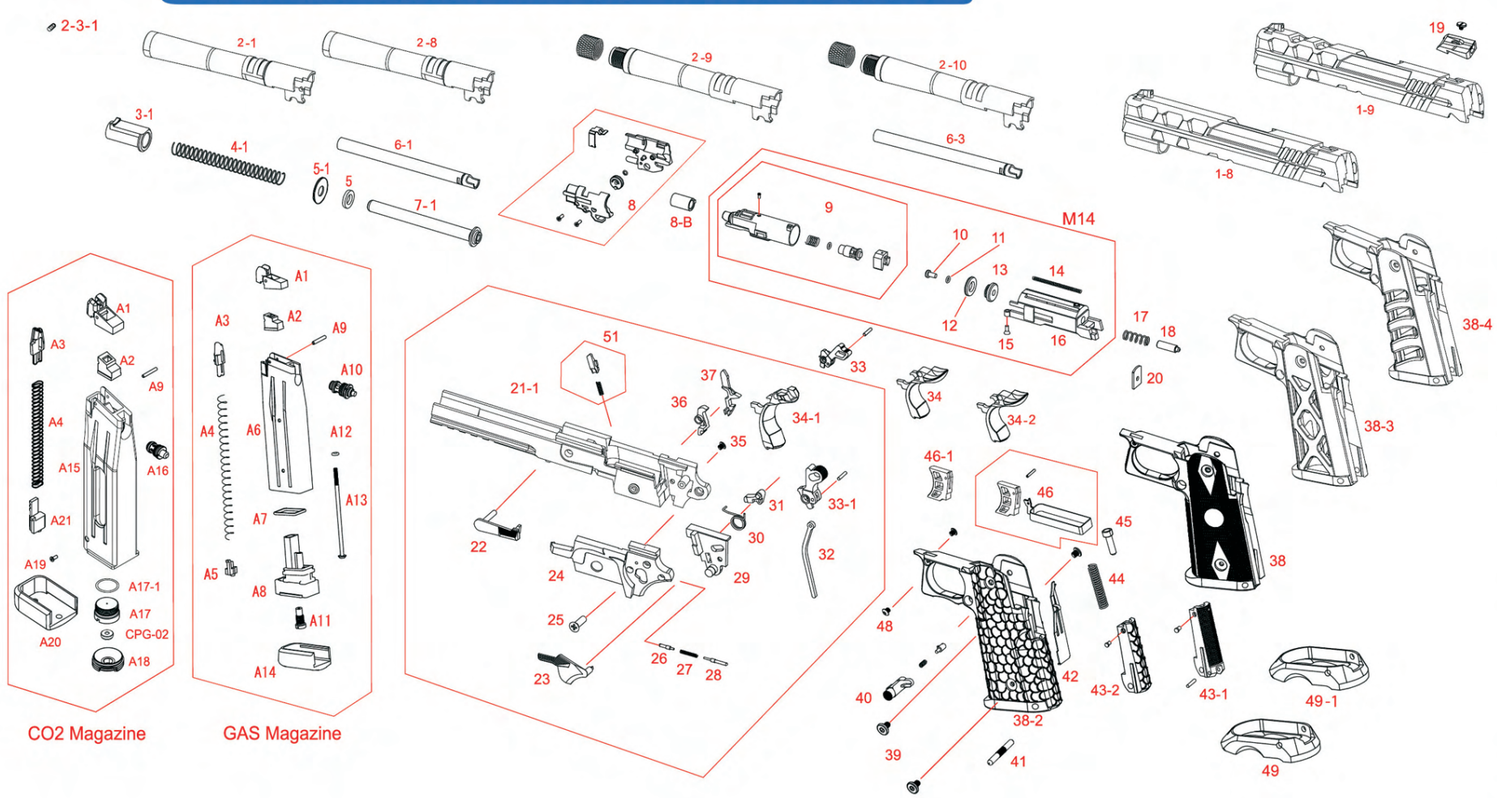

SR HI-CAPA TARTARUS 4.3” VER. PARTS LIST

No	DESCRIPTION
1-8	Tartarus 4.3” MKI MKII Slide
1-9	Tartarus 4.3” MKIII MKIV Slide
2-1	4.3” Ver. Outer Barrel(BK)
2-8	4.3” Ver. Outer Barrel(RG)
2-9	4.3” Ver. Extension Outer Barrel(BK)
2-10	4.3” Ver. Extension Outer Barrel(SV)
2-3-1	Screw
3-1	Recoil Spring Plug(4.3 Ver.)
4-1	Recoil Spring(4.3 Ver.)
5	Rubber Washer
5-1	Washer
6-1	Inner Barrel(4.3 Ver.) 95mm
6-3	Inner Barrel(4.3 Ver.) 105mm
7-1	Recoil Spring Guide(4.3 Ver.)
8	Hop-Up Chamber
8B	Hop Bucking
9	Air Nozzle
10	Screw
11	O Ring
12	Piston O Ring
13	Piston
14	Nozzle Spring
15	Screw
16	Air Nozzle base
17	Firing pin Spring
18	Dummy Firing pin
19	Raer Sight
20	Plate
21-1	Lower Receiver (4.3” ver.)
22	Slide Stop
23	Safety
24	Hammer base
25	Screw
26	Pin

No	DESCRIPTION
27	Spring
28	Pin
29	Hammer base cover
30	Sear Spring
31	Impact Pin
32	Hammer Guide
33	Hammer(5.1” Ver.)
33-1	Hammer(4.3” Ver.)
34	Grip Safety(5.1” Ver.) Black
34-1	Grip Safety(4.3” Ver.)
34-2	Grip Safety(5.1” Ver.) Silver
35	Screw
36	Shear Spring
37	Shear
38	Athletics Grip
38-2	BabaYaga Grip
38-3	Grid Type Grip
38-4	Rib Type Grip
39	Screw
40	Magazine Catch
41	Main Spring Housing Pin
42	Sear Spring
43-1	Main Spring Housing
43-2	Baba Yaga Main Spring Housing
44	Main Spring
45	Main Spring Screw
46	Trigger Set
46-1	Trigger(Silver)
48	Screw
49	Magwell
49-1	Magwell(SV)
51	Disconnector
M14	Air Nozzle Set

MAGAZINE PATRS LIST

No	DESCRIPTION
A1	Magazine Lip
A2	Air Nozzle Rubber
A3	Magazine Bar
A4	Magazine Spring
A5	Magazine Base Stopper
A6	Magazine Frame
A7	O Ring
A8	Magazine Base
A9	Pin
A10	Valve
A11	Gas Valve
A12	O Ring
A13	Screw
A14	Magazine Bottom
A15	CO2 Magazine Frame
A16	CO2 Magazine Valve
A17	CO2 Cartidge Stab
A17-1	O Ring
A18	CO2 Cartidge Base Cover
A19	Screw
A20	CO2 Magazine Bottom
A21	Magazine Base Catch
CPG-02	Gas Seal

SRC AIRSOFT & ACCESSORIES
www.starrainbow.com.tw
src@starrainbow.com.tw
MADE IN TAIWAN

YouTube Broadcast Yourself™
SRC AIRSOFT TV
Find us on: facebook.
SRC AIRSOFT